Experimental investigations of 3 mm aperture PPLN structures

D Kolker[1,2,3], A Pronyushkina[2,3], A Boyko[2], N Kostyukova[2], S Trashkeev[1,2], B Nuyshkov[1] and V Shur[4]

[1] Research Laboratory of Quantum Optics Technology, Novosibirsk State University, 2 Pirogova str., Novosibirsk 630090, Russia
[2] Institute of Laser Physics SB RAS, 13/3 Acad. Lavrentyev ave., Novosibirsk 630090, Russia
[3] Novosibirsk State Technical University, 20 K. Marx ave., Novosibirsk 630073, Russia
[4] The Institute of Natural Sciences, Ural Federal University, 51 Lenin ave., Ekaterinburg 620000, Russia

E-mail: dkolker@mail.ru

Abstract. We are reporting about investigation of domestic 3 mm aperture periodically polled lithium niobate (PPLN) structures for cascaded mid-IR OPO. Wide aperture periodically poled MgO-doped lithium niobate (LiNbO3) structures at multigrating, fan-out and multi fan-out configuration were prepared at "Labfer LTD". Laser source based on such structures can be used for special applications. Four different PPLN structures were investigated and effective aperture for effective pumping was defined.

1. Introduction

Cascade optical parametric oscillator is a novel nonlinear device for consecutive transformation of pump laser energy at near IR to IR, MID IR and THz spectral region by utilizing of nonlinear nonoxide crystals or liquid crystals as a second step of primary pump energy conversion. The cascade OPO with intracavity pumping of initial signal wave possess flexibility for a choice of suitable second pump wavelength for conversion to MID IR and THz spectral region at second cascade. The theory of seldom OPO was presented at [1] by *F.Wong et al.* At [1] a parasitic OPO oscillation is addition component secondary signal and idler appeared at self-phase locked PPLN OPO when 3:2:1 regime was broken. Intracavity pumped optical parametric oscillators (OPOs) offer compact and robust design with higher pump power. However cascaded or tandem OPO schemes of this kind down conversion of laser radiation into the mid - IR spectral range have rarely been realized [2-3]. The second stage of this OPO based on nonoxide crystal $AgGaSe_2$ intracavity pumped by single grating PPKTP at first cascade at 1.85 μm. Extremely wide tuning range from 8 to 18 μm was demonstrated by using the angle tuning of type II $AgGaSe_2$ element into the OPO cavity. Lately at [4] the intracavity difference-frequency mixing (DFM) based on PPKTP-AGSe tandem was successfully demonstrated. The DFM tuning range 6.8-8.0 μm was driven by temperature tuning of PPKTP at the OPO cavity. At the present work, we are demonstrating a novel PPLN structures for effective intracavity pumping of cascade OPO.

2. Experimental setup

PPLN - OPO set-up is shown on figure 1. The pump source was a lamp-pumped and electro-optically Q-switched Nd:YAG laser LQ215 (Solar Laser Systems, Belarus) optimized for a repetition rate of 20

Hz. The linewidth of this laser is 1.5 cm^{-1}, M^2<2, and divergence <2.5 mrad. The laser generated pulse energy of 180 mJ and 5.6 ns (FWHM) pulses with an average power of 3.6W. The measured energy stability was ±2.5%. The Faraday isolator (Avesta 8AFI-1064C) installed to optical setup to avoid a feedback from OPO optical elements. The half-wave plate and polarizer used as an attenuator of the pump energy. Mirrors M1-M3 utilized for precision adjustment of the pump beam in to the OPO cavity. Fused silica lens f=300 mm with AR coating optimized for 1.064 μm was used for optimal focusing of pump radiation into the PPLN structure. M4 is dichroic mirror (Layertec model 103080). This mirror reflected for the pump radiation at 1.064 μm and transmitted for signal wave (spectral region 1.3-1.8 μm) and idler wave (spectra region 2.5 - 4.5 μm). The OPO cavity designed with two mirrors, Input coupler mirror M5 (Layertec 105804) was transmitting for the pump and idler wave, but R=98.5% for signal wave at the spectral region 1.350-1.70 μm. The back mirror M6 is Ag mirror (Thorlabs PF10-03-PO1) totally reflected pump, signal and idler waves. The beam splitter utilizing for separation idler and signal wave: idler wave reflected and energy measured by commercial power meter Thorlabs PM100D (sensor ES120C), signal wave transmitted and measured by wavelength meter Angstrom LSA L IR (High Finesse). Idler wavelength was recalculated by equation:

$$\boldsymbol{\lambda_{id}}^{-1} = \boldsymbol{\lambda_p}^{-1} - \boldsymbol{\lambda_s}^{-1}.$$

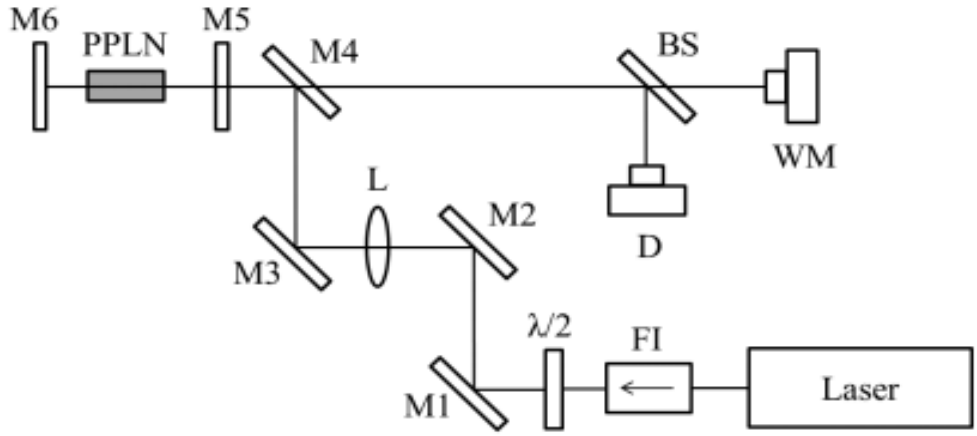

Figure 1. Experimental setup**:** Laser – LQ215 laser, λ = 1064 nm, τ = 6 ns; FI – Faraday isolator; λ/2 – half-wave plate; M1-M3 – flat mirrors; L – lens, f = 300 mm; M4 – dichroic mirror; M5 – input coupler; M6 – reflecting mirror; BS – beam splitter; D – pyroelectric sensor or power meter; WM – wavelength meter.

Four PPLN structures manufactured at LABER LTD for this experiment, and have 3 mm thickness. At figure 2 demonstrates the distributing of idler wave intensity for PPLN OPO. The PPLN structure was scanned by X-Y coordinate precision stage relatively of cavity axes of OPO cavity (signal wave in resonance, pump is double passed). Pump waist diameter was 200 μm. The pump energy limited by 70% of damage threshold energy of PPLN (200 MW/cm^2). Figure 2(a) is corresponding of fan-out structure (3×20×50 mm, Λ is varied 27.45 – 32.42 μm); 2(b) – multi fan-out structure (3×10×50 mm, four fan-out sections were placed at the same LN chip); 2(c) – multigrating structure with 3 symmetric sections: Λ_1 = 30,9 μm, Λ_2 = 31 μm, Λ_3 = 31,2 μm; 2(d) – multigrating structure with 3 symmetric sections Λ_1 = 31,3 μm Λ_2 = 31,4 μm, Λ_3 = 31,5 μm. The effective aperture (from full aperture) for

fan-out structure is defined as 57 % (figure 2a), for multi fan-out is 37% and for multigrating 68% and 73% respectively (figures 2c,d).

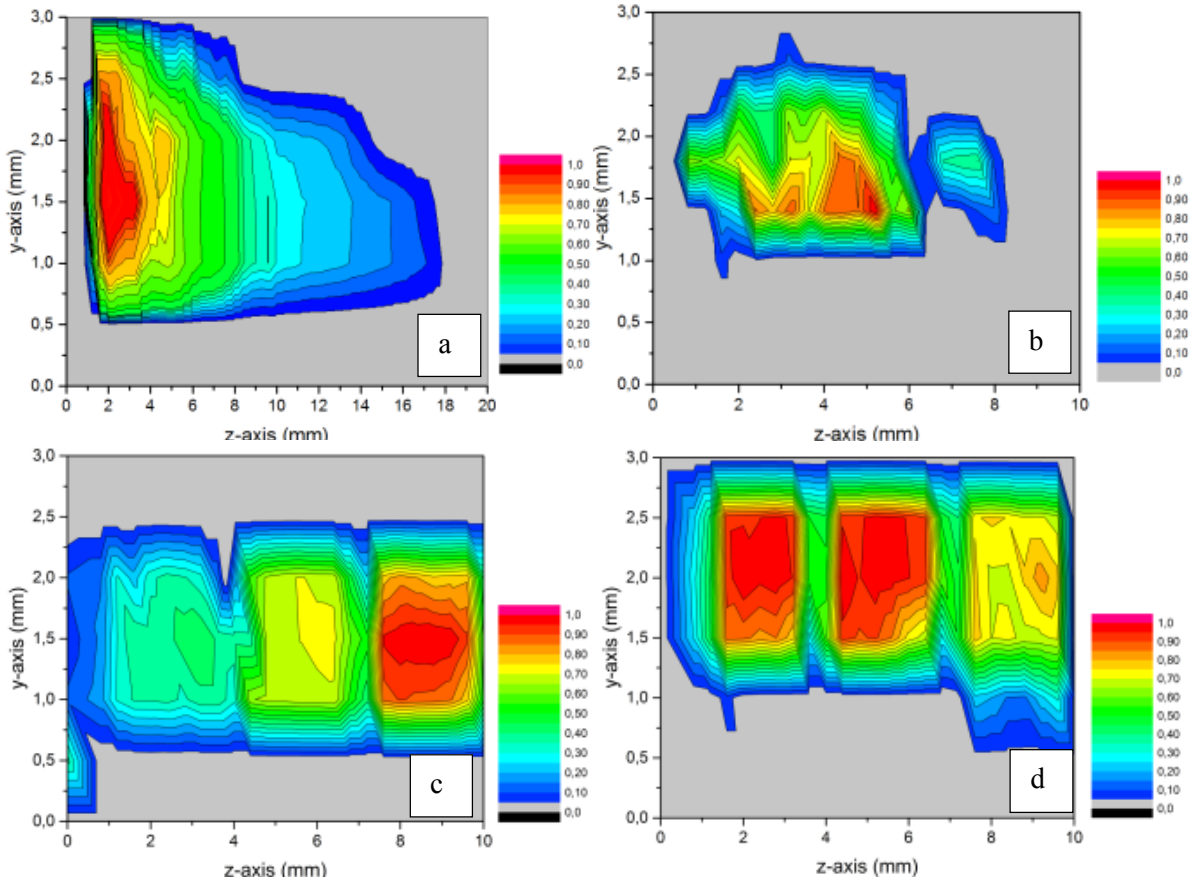

Figure 2. Idler energy distribution for four different PPLN structures.

3. PPLN OPO (3 mm aperture) experiment: performance and tuning curve

For the next experiment the lens L (figure 1) was changed by two lenses, L1 and L2, (figure 3) telescope (f1 = 200 mm f2 = -75mm). The lens L1 was mount at the precision X-coordinate table for the matching pump beam into the PPLN structure. The beam diameter was 2.5 mm horizontal and 2.7 mm at vertical direction.

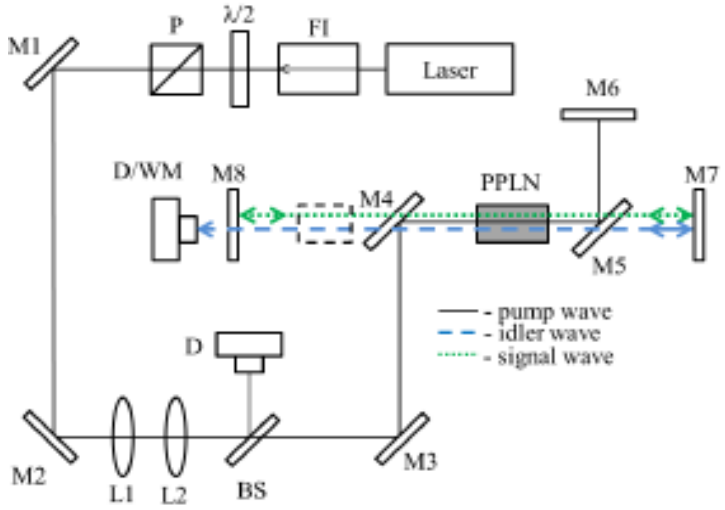

Figure 3. Experimental setup of 3 mm OPO. Laser Nd:YAG laser, l = 1064 nm, FI-Faraday isolator, λ/2 half wave plate, P-polarizer, L1, L2 –lenses, BS –quartz plate, D – power and energy meter, M4,M5 – bending mirrors, M6 – total reflecting mirror, M7.M8 – cavity mirrors for signal wave, WM-wavelength meter.

Figure 4 demonstrates tuning curve for idler wavelength versus pump energy for fan-out structure. Wide tuning range 2800-4500 nm for idler wave is demonstrated. Figures 5(a) and 5(b) demonstrate the performance of idler energy versus pump energy for λ_i=2.94 μm and λ_i=3.2 μm. The pump beam diameter was 2.7 mm for horizontal and 2.6 mm for vertical coordinate.

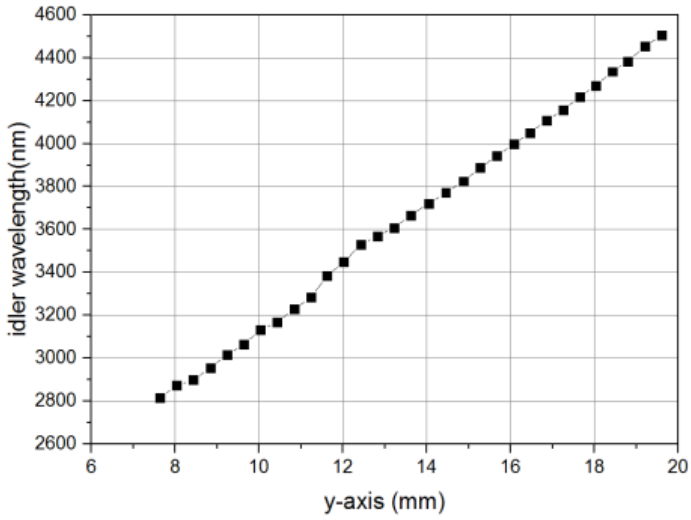

Figure 4. Tuning curve for 3 mm aperture fan-out PPLN structure.

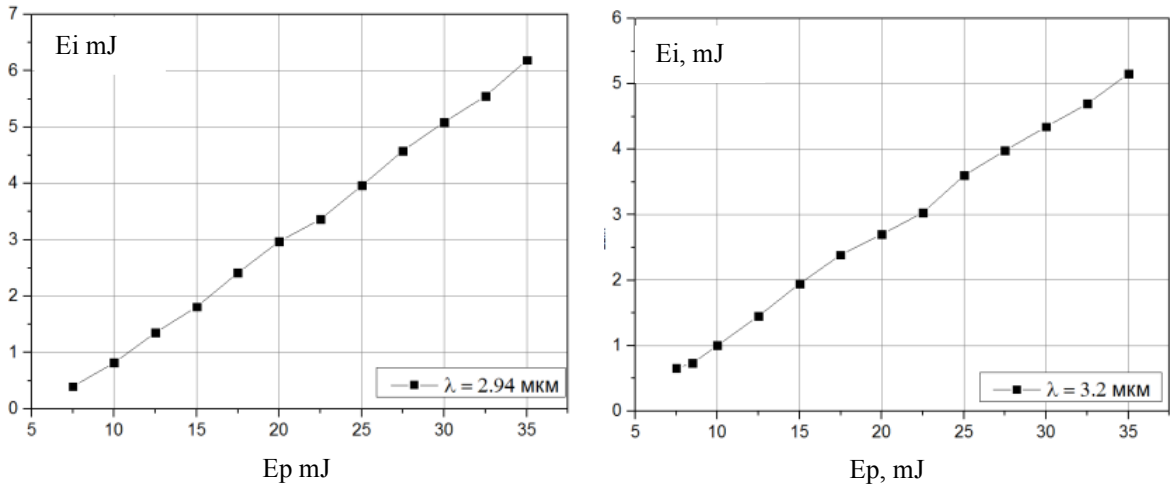

Fugure 5. (a) and (b) idler wave energy versus pump energy for two different grating.

For maximum, pump level, at figure 5(a): the corresponding pump-to-idler energy conversion efficiency is 17% and quantum efficiency is 48.9%, and the slope efficiency is 20.7%. At figure 5(b): pump to idler energy conversion efficiency is 14.8%, quantum efficiency is 41% and slope efficiency is 16.2%.

Conclusion

We are demonstrating efficiency of pump energy conversion (Ng:YAG laser at 1.064 μm) 17.7% for 2.94 μm and 14.8 % for 3.2 μm respectively. The estimated maximum signal intracavity energy for PPLN OPO (at 35 mJ primary pump by Nd:YAG laser) for 2.6 mm diameter of signal wave beam is promising to reach at least 5 times above secondary threshold by inserting second element II-type $AgGaSe_2$ into the OPO cavity for 8-18 μm oscillation.

Acknowledgment

This work was supported by the NSU program 5-100 of the Russian Ministry of Education and Science.

References

[1] Wong F, Gorelik P, Kolker D and Zondy J J 2006 *Optics Letters* **31** 2039–41
[2] Boyko A, Marchev G, Petrov V, Pasiskevicius V, Kolker D, Zukauskas A and Kostyukova N 2016 *Optics Express* **23** 33460–5
[3] Boyko A, Marchev G, Petrov V, Pasiskevicius V, Kolker D, Zukauskas A and Kostyukova N 2016 *High-Brightness Sources and Light-Driven Interactions* (OSA, EUV, HILAS, MICS)
[4] Boyko A A, Kostyukova N Y, Marchev G M, Pasiskevicius V, Kolker D B, Zukauskas A and Petrov V 2016 *Optic Letters* **41** 2791–4